EFX5-251

ELECTRIC COUNTERBALANCE FORKLIFT TRUCK 2.5T

2500 kg | 6000 mm | 80 V Li-Ion

The X5 Series is ideal for medium to heavy-duty operations, from manufacturing and construction to logistics centers and outdoor yards. Its pneumatic tires, 150 mm ground clearance, and sealed electrical components enable smooth, safe operation even on uneven or unpaved surfaces. The modular Li-ion battery system allows companies to expand energy capacity from 280Ah to 560Ah, adapting to single-shift, multi-shift, or seasonal high-demand applications without changing the truck setup.

SPECIFICATION	REF	UNIT	VALUE
Battery type			Li-Ion
Battery nominal capacity K5		Ah	280
Battery voltage		V	80
Rated capacity	Q	kg	2500
Load centre distance	c	mm	500
Service weight		kg	3835
Height, mast lowered	h_1	mm	2090
Lift	h_3	mm	3000
Height, mast extended	h_4	mm	4065
Overall length	l_1	mm	3590
Overall width	b_1/b_2	mm	1154
Length to face of forks	l_2	mm	2520
Fork dimensions	s/e/l	mm	40×122×1070
Turning radius	Wa	mm	2270
Manufacturer			EP
Model designation			EFX5 -251

Copyright 2026 EP Equipment. All rights reserved. | Datasheet last updated 2026-03-27

Features

Modular Li-ion battery system for maximum flexibility

The X5 Series introduces a modular battery architecture, allowing operators to install one or two battery modules depending on workload intensity. Each 80V/280Ah unit can be combined to achieve 560Ah total capacity, offering long runtime and seamless power management. This flexibility supports 24/7 operations and makes the X5 adaptable to evolving user needs over time

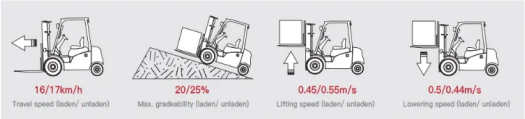

High performance for productivity boost

Delivering travel speeds up to 17 km/h, lifting speeds up to 0.55 m/s, and gradeability up to 25%, the X5 ensures fast, efficient handling comparable to traditional IC forklifts. Its lithium technology guarantees consistent performance and fast recovery through opportunity charging, enabling maximum uptime in fast-paced operations.

All-terrain capability with 150 mm ground clearance

With pneumatic tires and 150 mm ground clearance, the X5 Series effortlessly manages ramps, potholes, and rough surfaces. The robust undercarriage prevents chassis damage and ensures reliable mobility across mixed terrains, making it a dependable solution for both warehouse and outdoor logistics.

Operator comfort and improved components

The X5 prioritizes operator safety and comfort with a redesigned cabin, high-visibility mast, ergonomic seat with armrest, wide brake pedal, and large LED display. Enhanced LED front lighting and improved hydraulic controls offer excellent visibility and smooth, precise operation throughout the workday.

Copyright 2026 EP Equipment. All rights reserved. | Datasheet last updated 2026-03-27

VDI Chart

	SPECIFICATION	REF	UNIT	VALUE
1.1	Manufacturer			EP
1.2	Model designation			EFX5 -251
1.3	Drive			Electric
1.4	Operator type			Seated
1.5	Rated capacity	Q	kg	2500
1.6	Load centre distance	c	mm	500
1.8	Load distance, centre of drive axle to fork	x	mm	495
1.9	Wheelbase	y	mm	1685
2.1	Service weight		kg	3835
2.2	Axle loading, laden front/rear		kg	5679/656
2.3	Axle loading, unladen front/rear		kg	1711/2124
3.1	Tyres			Pneumatic
3.2	Tyre size, front		mm	7.00-12-12PR
3.3	Tyre size, rear		mm	18X7-8-14PR
3.5	Wheels, number front/rear (x=drive wheels)			2x/2
3.6	Tread width, front	b_{10}	mm	975
3.7	Tread width, rear	b_{11}	mm	955
4.1	Tilt of mast/fork carriage forward/backward		°	6/10
4.2	Height, mast lowered	h_1	mm	2090
4.3	Free lift	h_2	mm	195
4.4	Lift	h_3	mm	3000
4.5	Height, mast extended	h_4	mm	4065
4.7	Height of overhead guard (cabin)	h6	mm	2165
4.8	Seat height relating to SIP/stand height	h7	mm	1095
4.12	Coupling height	h10	mm	315
4.19	Overall length	l_1	mm	3590
4.20	Length to face of forks	l_2	mm	2520
4.21	Overall width	b_1/b_2	mm	1154
4.22	Fork dimensions	s/e/l	mm	40×122×1070
4.23	Fork carriage ISO 2328, class/type A, B			2A
4.24	Fork carriage width		mm	1040
4.31	Ground clearance, laden, below mast		mm	100

Copyright 2026 EP Equipment. All rights reserved. | Datasheet last updated 2026-03-27

	SPECIFICATION	REF	UNIT	VALUE
4.32	Ground clearance, centre of wheelbase	m_2	mm	150
4.34.1	Aisle width for pallets 1000×1200 crossways	Ast	mm	3965
4.34.2	Aisle width for pallets 800 × 1200 lengthways	Ast	mm	4165
4.35	Turning radius	Wa	mm	2270
5.1	Travel speed, laden/unladen		km/h	16/17
5.2	Lift speed, laden/unladen		m/s	0.38/0.45
5.3	Lowering speed, laden/unladen		m/s	0.54/0.56
5.8	Max. gradeability, laden/unladen		%	17/25
5.10	Service brake			Hydraulic
5.11	Parking brake			Mechanical
6.1	Drive motor rating S2 60 min		kW	16
6.2	Lift motor rating at S3 15%		kW	24
6.4	Battery nominal capacity K5		Ah	280
6.4	Battery voltage		V	80
6.4.1	Battery type			Li-Ion
6.5	Battery weight		kg	185
6.6	Energy consumption according to DIN EN 16796		kWh/h	7.7 [1)]
6.7	Turnover output according to VDI 2198			155
6.8	Turnover efficiency according to VDI 2198			22.63
8.1	Type of drive unit			AC
10.1	Operating pressure for attachments		bar	180
10.2	Oil volume for attachments		ℓ/min	35
10.5	Steering design			Hydraulic
10.7	Sound pressure level at the driver's seat		dB(A)	<74

Copyright 2026 EP Equipment. All rights reserved. | Datasheet last updated 2026-03-27

VDI Drawing

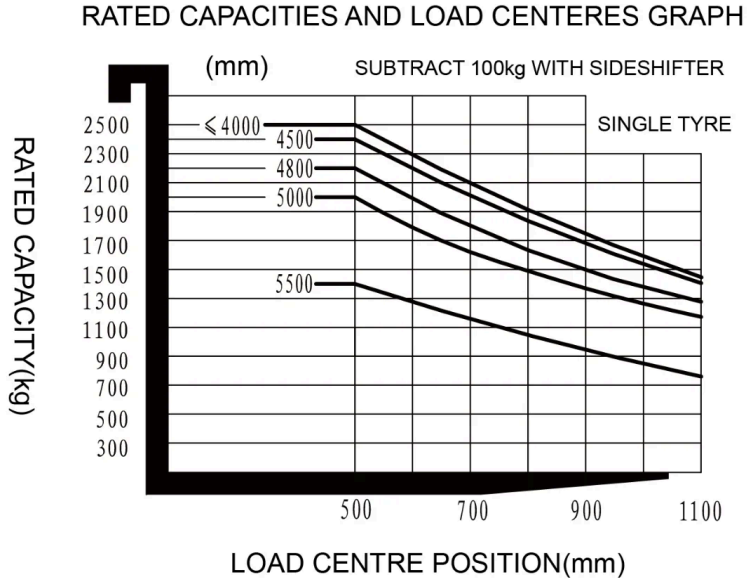

Copyright 2026 EP Equipment. All rights reserved. | Datasheet last updated 2026-03-27

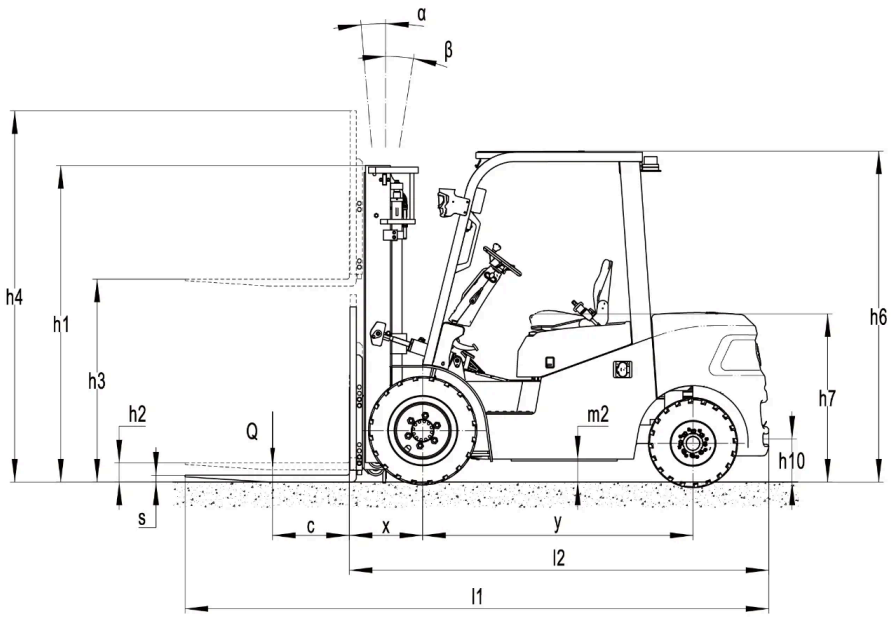

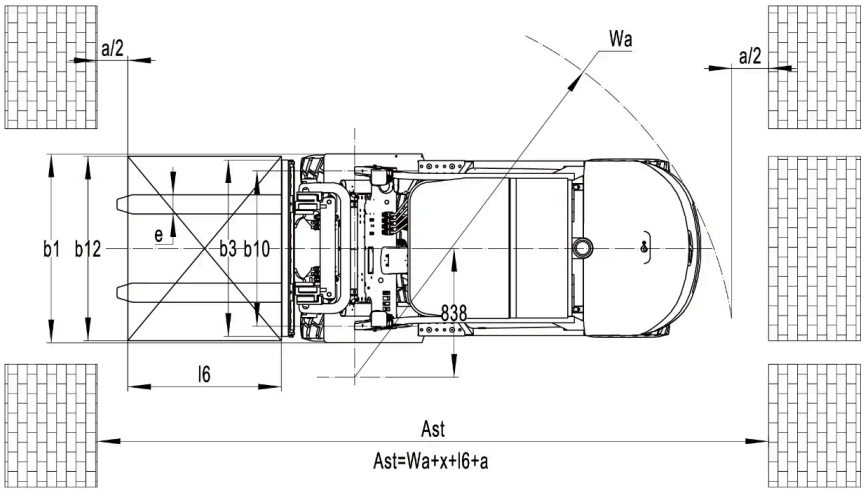

Mast Options

MAST TYPE	LIFT HEIGHT (H3, MM)	MAST LOWERED HEIGHT (H1, MM)	MAST EXTENDED HEIGHT, NO BACKREST (H4, MM)	MAST EXTENDED HEIGHT, WITH BACKREST (H4, MM)	FREE LIFT HEIGHT, NO BACKREST (H2, MM)	FREE LIFT HEIGHT, WITH BACKREST (H2, MM)
2-Standard Mast	3000	2090	3595	4060	195	195
2-Standard Mast	3300	2240	3895	4360	195	195
2-Standard Mast	3500	2340	4095	4560	195	195
2-Standard Mast	3600	2390	4195	4660	195	195
2-Standard Mast	4000	2640	4595	5060	195	195

Copyright 2026 EP Equipment. All rights reserved. | Datasheet last updated 2026-03-27

MAST TYPE	LIFT HEIGHT (H3, MM)	MAST LOWERED HEIGHT (H1, MM)	MAST EXTENDED HEIGHT, NO BACKREST (H4, MM)	MAST EXTENDED HEIGHT, WITH BACKREST (H4, MM)	FREE LIFT HEIGHT, NO BACKREST (H2, MM)	FREE LIFT HEIGHT, WITH BACKREST (H2, MM)
2-Standard Mast	4500	2890	5095	5560	195	195
2-Free Mast	3000	2035	3765	4100	1345	1010
2-Free Mast	3300	2185	4065	4400	1495	1160
2-Free Mast	3600	2335	4365	4700	1645	1310
3-Free Mast	4300	2080	5040	5355	1370	1055
3-Free Mast	4500	2160	5230	5545	1450	1240
3-Free Mast	4800	2265	5530	5845	1555	1325
3-Free Mast	5000	2350	5730	6045	1640	1325
3-Free Mast	5500	2600	6230	6545	1890	1575
3-Free Mast	6000	2850	6730	7045	2140	1825

Options

ITEM	OPTIONS (optional items marked in yellow)
Fork dimension	122*40*1070 | 122*40*920 | 122*40*1150 | 122*40*1220 | 122*40*1370 | 122*40*1500 | 122*40*1600 | 122*40*1700 | 122*40*1820 | 122*40*1900 | 122*40*2000 | 122*40*2200
Front wheel material	Pneumatic | Normal solid | Traceless solid
Rear wheel material	Pneumatic | Normal solid | Traceless solid
Battery capacity	80V280AH | 80V560AH
Charger	80V35A integrated | 80V60A integrated | 80V60A○80V100A | 80V150A | 80V200A (560AH)
Battery display indicator (BDI)	With time Bluetooth without PSE
Seat type	Comfortable + safety belt switch | Seat with armrest with safety belt swich | Suspension + safety belt switch
Attachments	Built-in sideshifter | External shifter | Fork positioner with sideshift | Clamp
Traction pin	Yes and not customized
Anti-static chain	Yes and not customized
Front lamp	LED
Rear lamp	No | LED

Copyright 2026 EP Equipment. All rights reserved. | Datasheet last updated 2026-03-27

ITEM	OPTIONS (optional items marked in yellow)
Warning lamp	Yes
Steering lamp	LED
Blue lamp	No | Rear | Front and rear
Area warning lamp	No | Both side | Both side and rear
Rearview mirror	One in front | Two on sides | Two on side and one in front
Buzzer	Yes and not customized
OPS system	Yes and not customized
USB interface	USB with A and C type
Telematics	Yes and not customized | No
Cabin	No | Basic half cabin | Upgrade half cabin | Full cabin
Overhead guard	With tempered glass | No
Turn speed control	No | Yes and not customized
Heating system during lithium battery charging	No | Yes and not customized
Operator identification device	No | Card reader
Lifting electronic limit	No | Yes and not customized
Hydraulic control	Mechanical lever | Joystick | Fingertip
Rear armrest horn	Yes and not customized
Wiper water unit	Yes only with cabin

Copyright 2026 EP Equipment. All rights reserved. | Datasheet last updated 2026-03-27